This drawing and any information or descriptive matter set out hereon are confidential and the copyright of GATIC, and are not to be disclosed, loaned, copied or used for manufacturing or tendering or for any other purpose without permission. © 2011

	Revision	Date	Sig
A	DETAILS UPDATED	01:01:12	D.A.L

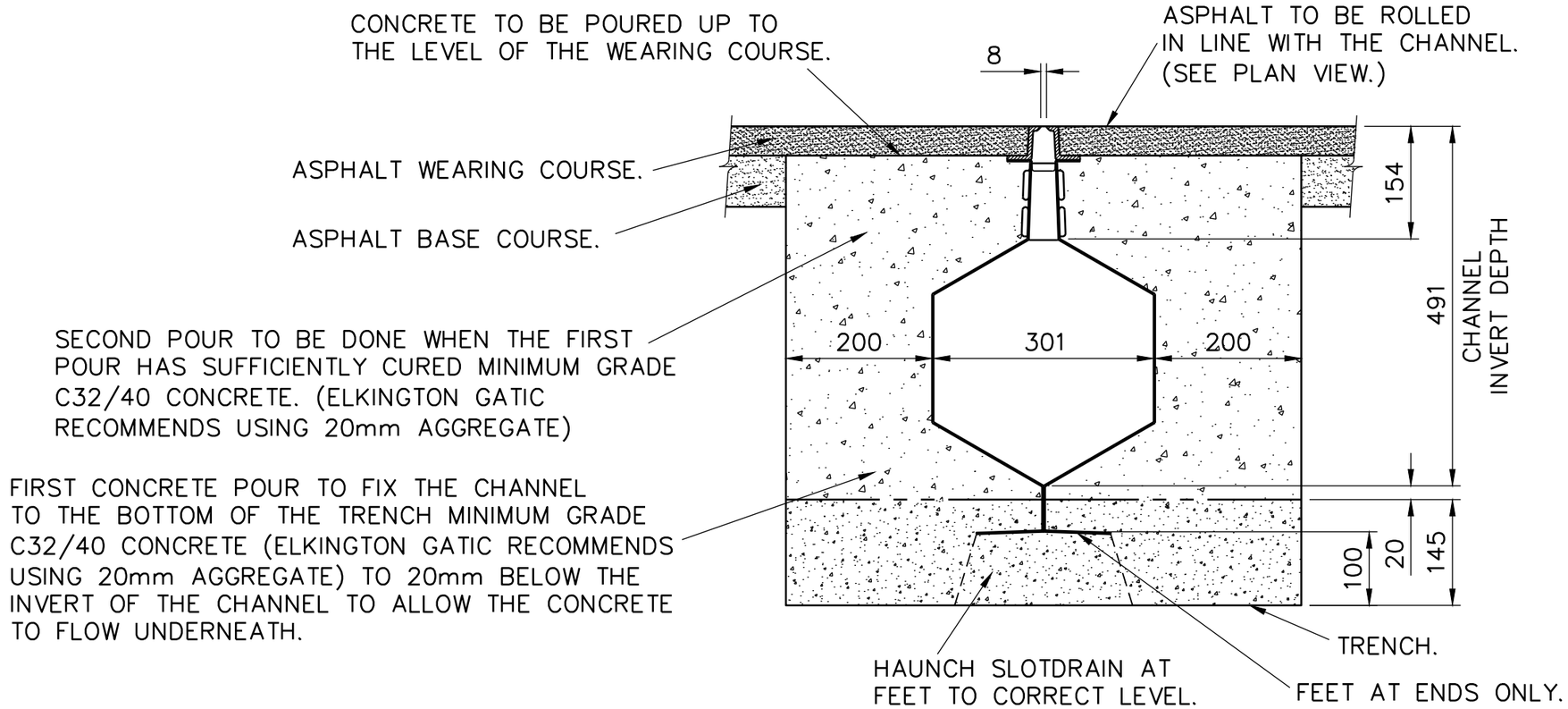

GATIC SLOTDRAIN 300mm WIDE CASTSLOT 8

S12321

SECTION AND PLAN DETAILS ASPHALT INSTALLATION C250 LOADING ONLY

NOT TO SCALE

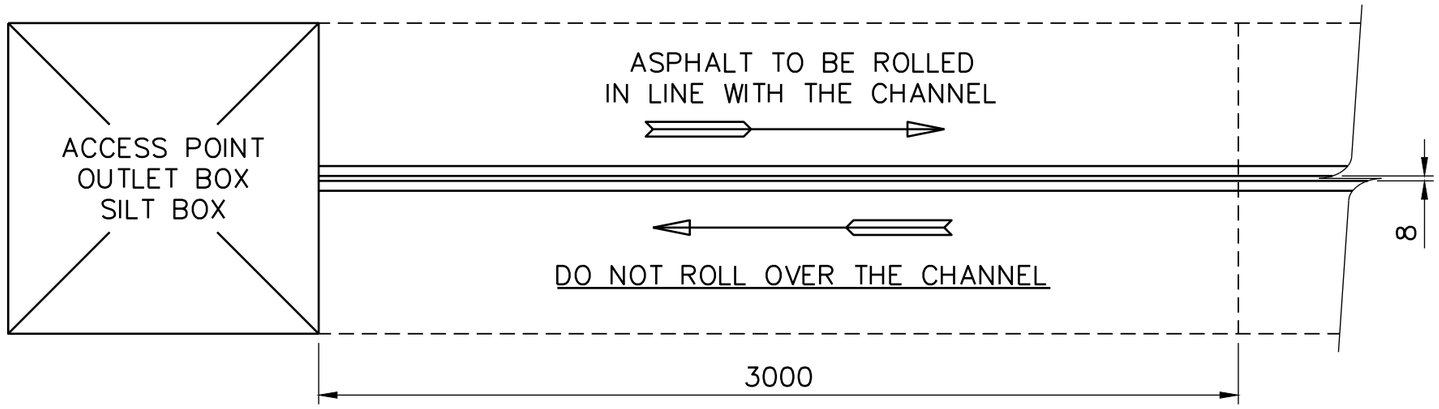

PLAN DETAIL

NOT TO SCALE

NOTE:

THE RESPONSIBILITY TO PROVIDE THE FOUNDATION DESIGN SHOULD BE THAT OF THE PROJECT ENGINEER. THE FOUNDATION SHOULD BE STRONG ENOUGH TO TAKE THE ANTICIPATED LOADS FROM THE LARGEST AIRCRAFT/ VEHICLES THAT WILL TRAFFIC THE CHANNEL.

CE

DO NOT SCALE

GATIC

Specialised Engineering. Special Advice.

Poulton Close Dover, Kent
CT17 0UF, England
Telephone: +44 (0) 1304 203545
Fax: +44 (0) 1304 215001
E.Mail: info@gatic.com
Web: www.slotdrain.com
Web: www.gatic.com
A division of ALUMASC LIMITED.

GATIC SLOTDRAIN

STANDARD SLOTDRAIN CROSS SECTION AND PLAN INSTALLATION DETAILS

Drawn by	G.J.C	Date	23:11:10
Checked by	P.M.	Scale	1:7.5

Drawing Number

WC/4286/A