Elkington

Paveslot 300

This drawing and any information or descriptive matter set out hereon are confidential and the copyright of GATIC, and are not to be disclosed, loaned, copied or used for manufacturing or tendering or for any other purpose without permission. © 2011

	Revision	Date	Sig
C	THROAT SPACER UPDATED.	01:04:09	P.M.

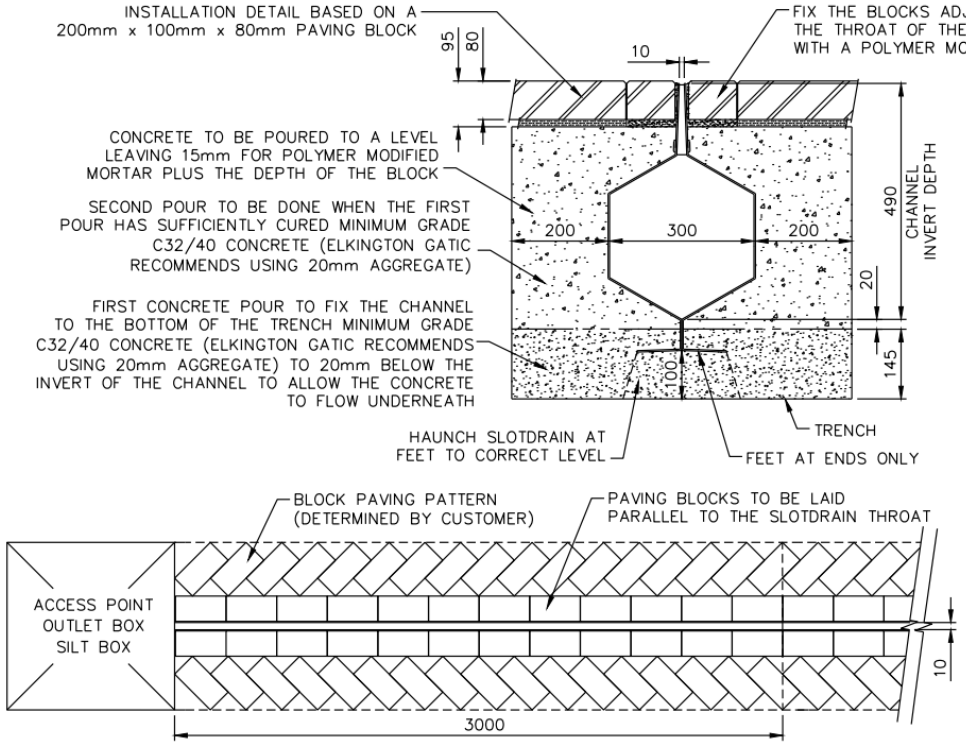

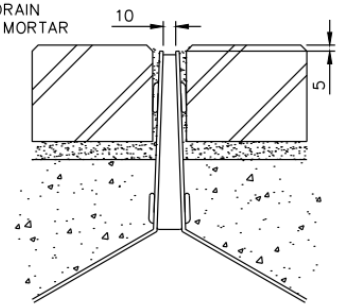

THROAT DETAILS

SCALE 1:5

NOTE:

THE RESPONSIBILITY TO PROVIDE THE FOUNDATION DESIGN SHOULD BE THAT OF THE PROJECT ENGINEER. THE FOUNDATION SHOULD BE STRONG ENOUGH TO TAKE THE ANTICIPATED LOADS FROM THE LARGEST AIRCRAFT/ VEHICLES THAT WILL TRAFFIC THE CHANNEL.

PLAN DETAIL

NOT TO SCALE

GATIC SLOTDRAIN
300mm PAVESLOT
S11320
SECTION AND PLAN
DETAILS

BLOCK PAVING INSTALLATION

NOT TO SCALE