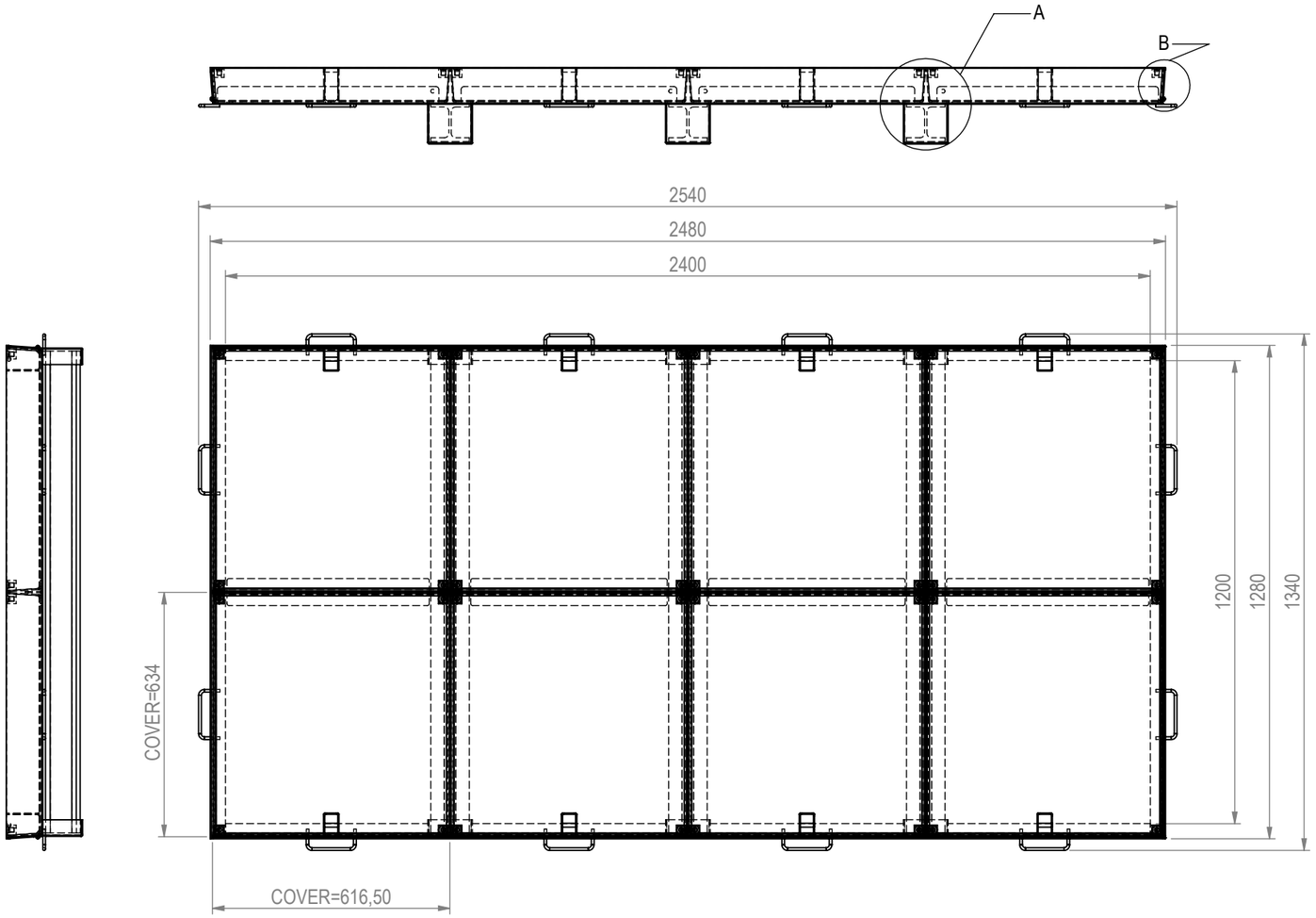

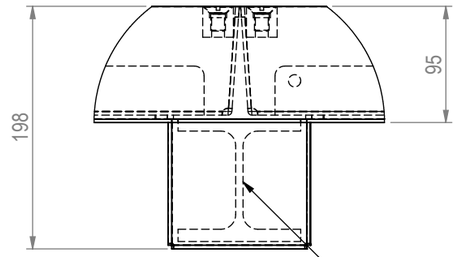

DETAIL A
SCALE 1 : 5

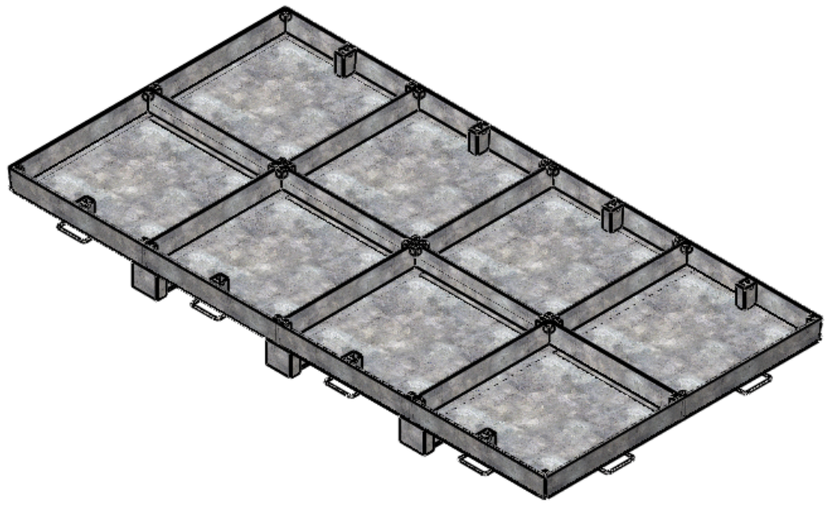

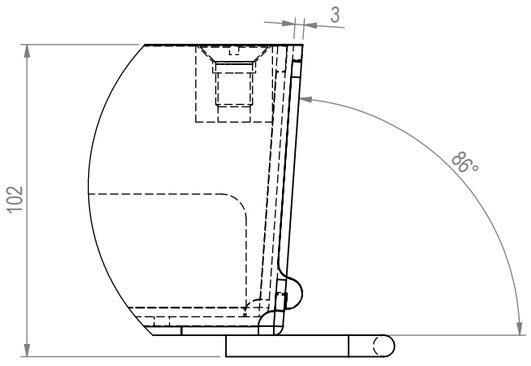

DETAIL B
SCALE 1 : 2